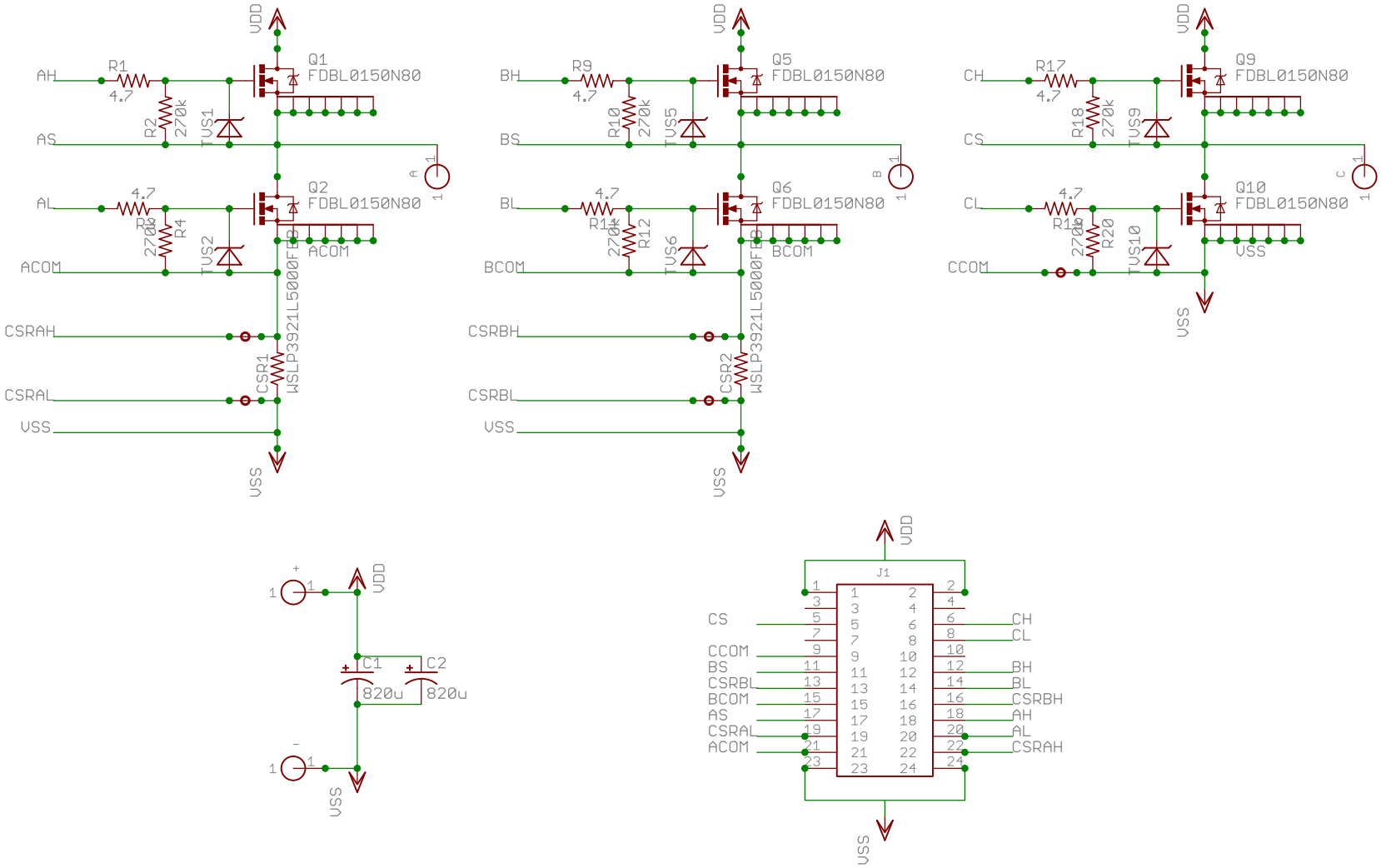Brushless Ragebridge 6-FET 14S Signal Board
Equals Zero Designs 2017